inogen®

YOUR GUIDE TO PORTABLE OXYGEN

Call 1-800-819-0646 for a free consultation

OXYGEN THERAPY THAT MOVES WITH YOU

If you require and have been prescribed supplemental oxygen therapy, get ready for a welcome breath of fresh air. For over 20 years, Inogen® has helped patients worldwide replace bulky portable oxygen tanks with lightweight, portable oxygen concentrator (POC) systems that deliver supplemental oxygen with the extra advantage of mobility.

With our reliable, pulse-dose based Intelligent Delivery Technology®, Inogen helps patients receive the benefits of oxygen therapy while maintaining their active lifestyles. This guide will introduce you to Inogen's line of oxygen therapy solutions. To confirm the right option for you, call **1-800-819-0646** to speak with an oxygen specialist.

Inogen One G4®

Inogen® Rove 6™

Inogen At Home®

BUILDING ON A HISTORY OF SUCCESS

For over twenty years, Inogen® has been more than just a leader in the respiratory care industry - we've become a true ally in the well-being of our customers. Our best-selling line of POCs has become a trusted solution, with over a million units sold worldwide, helping patients live with the flexibility and convenience they desire. Now we've taken the groundbreaking benefits of our popular Inogen® One POCs and raised the bar even higher.

PORTABLE OXYGEN TO HELP YOU ENJOY LIFE

Inogen® portable oxygen concentrators support patient respiratory care and mobility. Inogen® POCs replace heavy portable oxygen tanks in a system that can be discretely carried. With reliable, pulse-dose based Intelligent Delivery Technology®, Inogen® POCs are powered to provide medical grade oxygen delivery all day, every day.

Take it on-the-go with confidence. Charging is also convenient with the ability to plug into a wall outlet, car DC outlet, or with an external battery charger.

Inogen One G4®

Inogen® Rove 6™

*Based on technical performance test data.

G4 carry bag

Mobility Takes Flight

All Inogen® portable systems meet FAA acceptance criteria for carriage and use on board aircraft.*

INTRODUCING THE INOGEN® ROVE 6™

Experience oxygen therapy that moves with you. The Rove 6 features Inogen's patented pulse-dose-based Intelligent Delivery Technology®* across 6 flow settings to deliver medical grade oxygen on the go. The Rove 6™ offers extended battery life providing up to 12 hours 45 minutes (on setting 1).

*Pulse-dose based Intelligent Delivery Technology® ensures that oxygen therapy is delivered efficiently and effectively in all modes of use. Inogen oxygen delivery systems are clinically validated to provide the necessary oxygen for most ambulatory patients during all phases of daily activity and during sleep (RespirCare March 2006:51(3):252-256; and CHEST 1999 Vol.116(1):22-29).

INOGEN® ACCESSORIES FOR ON-THE-GO OXYGEN THERAPY

As an Inogen® customer, you can select from a wide range of accessories. Here are a few of our most popular items.

- AC and DC power cables
- Additional batteries
- External battery chargers
- Replaceable sieve beds and filters
- Backpacks
- Hip bag (G4® only)
- Cart (Rove 6™ only)
- Carry bags

Browse our latest range and purchase online at inogen.com

> "I am very pleased and excited to be part of the Inogen® family. My freedom to travel and attend activities has been restored...It is truly light weight and easily managed in the car or at home. Inogen® is a blessing to me."
> *—Debbie T.*

Exact accessory styles and colors may slightly vary by product.

Hands-free with the backpack

*The patient represented in this content is a paid consultant for Inogen, Inc. The opinions and experiences presented here are independently prepared and for informational purposes only.

SUPPORT TO HELP YOU ENJOY MOBILITY

Our goal is to ensure easy, affordable access to patients who can benefit from an Inogen® portable oxygen system. That begins by working with you to create a customized package based on your lifestyle and needs and by offering a 30-day free trial[1] to help you discover the benefits of Inogen's portable oxygen concentrators for yourself.

Ordering your Inogen® system is easy, too. Here are two options to help you get started in no time:

Purchase

Customers are welcome to directly purchase from us. Just call **1-800-819-0646** to speak with an oxygen specialist who will perform a confidential evaluation and present appropriate Inogen® solutions for you. Benefits include:

- **No ongoing co-pays**
- **A new Inogen® system covered by a 3-year warranty[2]**
- **Optional lifetime warranty available for your new Inogen® system[2]**

Medicare/Insurance

You may be eligible to have your Inogen® system covered by Medicare or insurance.[3] Our team will directly work with your doctor, Medicare and insurance provider to identify what benefits may be available to you. Call **1-800-819-0646** for more information.

[1]Applicable for new purchases only.
[2]See limited warranty statement on www.inogen.com for complete warranty information.
[3]Co-payments and deductibles will apply.

Introducing the Inogen® Connect App

Customers who select the Rove 6™ or G4® can enjoy the extra advantage of our mobile app. Easily connect your smartphone to your Inogen® POC to assist with set up, monitor system status, adjust settings and more.[4] Ask us for details when you call.

Apple App Store | Google Play App Store | Inogen® Connect App

[4]Inogen® Connect is optional and is not required to operate the product. Inogen® Connect is available for customers in the United States and Canada.

INOGEN at HOME®

OXYGEN THERAPY TO HELP YOU

Our Inogen At Home® system combines 5-liter per minute continuous flow oxygen delivery with technology that is quiet, letting you watch TV or visit with friends with little noise disturbance.

At just 18 pounds, Inogen At Home® is a compact unit you can keep at your bedside or use it during the day as a companion around the house. The At Home is energy-efficient to help you save in electric costs over time.

INOGEN at HOME®

- Only 18 pounds
- Quiet
- Low power consumption

Compact, Quiet & Powerful!

SAVE ON YOUR ELECTRIC BILL EACH YEAR*

Thanks to its energy technology, Inogen At Home® is an energy efficient option for oxygen concentrators used at home. Because it's designed for 24/7 use, the power consumption can significantly add up.

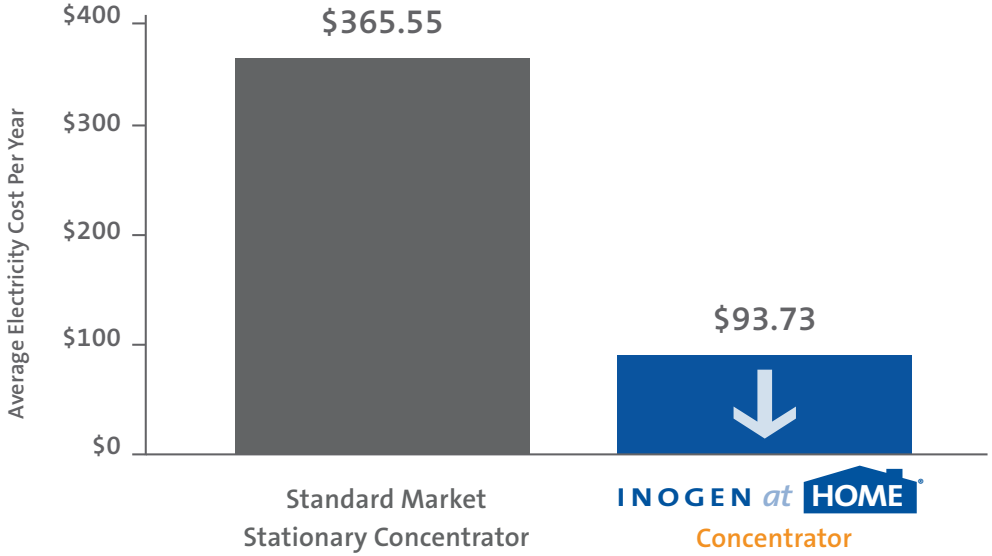

* Calculations are based on published US average hourly kilowatt rates, and assume stationary oxygen concentrator usage of 20 hours per day. A flow setting of 2 liters per minute was used as the Inogen At Home® power draw, with the published specifications of a common competitive stationary concentrator used as the standard market concentrator power draw. Actual costs and/or savings may vary.

**The patient represented in this content is a paid consultant for Inogen, Inc. The opinions and experiences presented here are independently prepared and for informational purposes only.

"It's given me a great deal of freedom. With the Inogen®, my quality of life has increased."

*—Claudia H.***

Powerful oxygen therapy in a compact size.

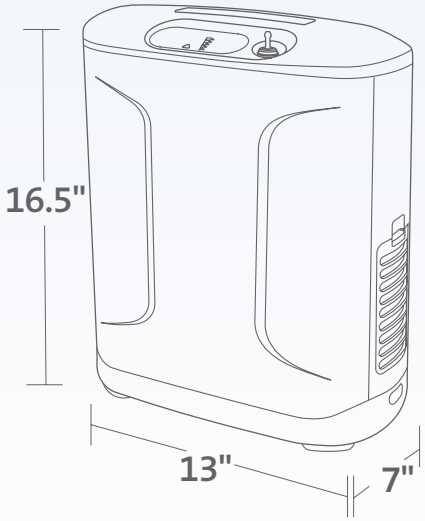

Select Your System

DISCOVER THE RIGHT INOGEN® SYSTEM FOR YOU

	Inogen One G4®	Inogen® Rove 6™	Inogen At Home®
WEIGHT	2.8 lbs	4.8 lbs	18 lbs
OXYGEN FLOW	Pulse-dose, Intelligent Delivery Technology® 1-3 Settings	Pulse-dose, Intelligent Delivery Technology® 1-6 Settings	Continuous flow 1-5 Settings
BATTERY LIFE	Standard battery: up to 2.7 hours Extended battery: up to 5 hours	Standard battery: up to 6.25 hours Extended battery: up to 12.75 hours	N/A
POWER SENSING	AC Power Supply 100-240 V, 240 W, 50-60 Hz Auto sensing to allow for worldwide use	AC Power Supply 100-240 V, 240 W, 50-60 Hz Auto sensing to allow for worldwide use	AC Power Supply 100-240 V, 275 W, 50-60 Hz Auto sensing to allow for worldwide use
WARRANTY	3-year or lifetime warranty[1]	3-year or lifetime warranty[1]	3-year or lifetime warranty[1]
USE	Stationary, portable, travel	Stationary, portable, travel	Stationary
SIZE	5.91" L x 2.68" W 7.2" H[2]	7.18" L x 3.27" W 8.14" H[2]	13" L x 7" W 16.5" H
NOISE	40 dBA[3]	39 dBA[3]	45 dBA[3]

[1]See limited warranty statement on www.inogen.com for complete warranty information.
[2]When used with a standard battery [3]At flow setting 2

OUR CUSTOMERS ALWAYS HAVE THE FINAL WORD

"My Inogen® system is so much lighter than canisters, and gives me hours of freedom to do what I want. I also love the charging options, and the Inogen® Connect app. I only wish I found Inogen® sooner."

*- Jerry L.**

"As someone with COPD, having Inogen® at my side makes me feel safe. Last Christmas, my family took me to Walt Disney World, and I had the best day of my life. Thank you for giving me the ability to live my life again."

*- Situ G.**

"I'm beyond satisfied with my Inogen® portable and plug-in concentrators. The portable one lets me keep doing the work I enjoy, and walks and light exercise, while the plug-in is so quiet and light weight. It travels with me to visit family, and on trips with my husband. I'm so thankful."

*- Debra E.**

*The opinions expressed herein are independently prepared and for informational purposes only. The views expressed are of the individuals' only. The individual/s featured in this content did not receive any financial compensation for providing their testimonial/s to Inogen, Inc. to use in our program.

“THIS IS THE BEST OXYGEN CONCENTRATOR I COULD HAVE EVER BOUGHT.”

—Wayne W.*

Our team of oxygen specialists is passionate about providing mobility to the patients who place their trust in us.

Along with being recognized for medical design and high quality standards, Inogen® is an Accredited Homecare Provider. This allows us to extend our service philosophy by offering customers access to expert staff able to understand many facets of respiratory care, including issues relating to loss of mobility, breathlessness and fatigue.

*The opinions expressed herein are independently prepared and for informational purposes only. The views expressed are of the individuals' only. The individual/s featured in this content did not receive any financial compensation for providing their testimonial/s to Inogen, Inc. to use.

ACHC ACCREDITED
Nationwide Accredited Home care provider

BBB ACCREDITED BUSINESS A+ rating
A+ rating

DESIGNED IN THE USA
Designed in the USA.

bsi. ISO 13485 Medical Devices Quality Management
Highest quality standards with a Management System certified to ISO 13485.

POWERED TO PROVIDE MEDICAL GRADE OXYGEN ALL DAY EVERY DAY

Inogen® portable oxygen therapy has helped over 1 million patients in need of supplemental oxygen. It's a responsibility we take with exceptional care, which is why we're so pleased to share this guide with you. We understand that each patient begins their journey by exploring their options and making a decision to trust us as a health partner. When you're ready, our team is here to provide immediate assistance and ensure you find the right Inogen system for your health and lifestyle goals.
On behalf of the entire Inogen® family, thank you.

“Nothing in the world, to my knowledge, beats the convenience and portability of an Inogen...it made all the difference to my every day need to get around for business and pleasure. There are no trolleys to push or pull. The unit itself is small and lightweight. It provides oxygen and freedom.”

—Robert W.*

*The opinions expressed herein are independently prepared and for informational purposes only. The views expressed are of the individuals' only. The individual featured in this content did not receive any financial compensation for providing their testimonial/s to Inogen, Inc. to use in our program.

JOIN THE INOGEN® FAMILY

1. Call 1-800-819-0646 to speak to one of our oxygen therapy specialists.
2. Select your preferred Inogen® system, and we'll work with your doctor to confirm any necessary prescriptions.
3. Enjoy personal set up and use assistance after your Inogen® system is delivered.

All major credit cards and checks accepted.

VISA MasterCard AMERICAN EXPRESS DISCOVER NETWORK

Receive a free Medicare eligibility check.

Find out if your Inogen® system is eligible for full or partial coverage under Medicare, or your current insurance.* Simply ask us when you call, and we'll do the work for you, including contact with your doctor as appropriate. You also have the option to rent through insurance instead of purchasing your system.

Call 1-800-819-0646 for details.

*Co-payments and deductibles may apply.

inogen®

Follow us on Twitter:
www.twitter.com/InogenInc

Like us on Facebook:
www.facebook.com/inogen

www.instagram.com/InogenInc

www.youtube.com/InogenInc

Discover how people like you have enjoyed their mobility with Inogen®.
www.inogen.com/stories

Call **1-800-819-0646** for a free consultation

PM230136 v3.2